Mastercraft™

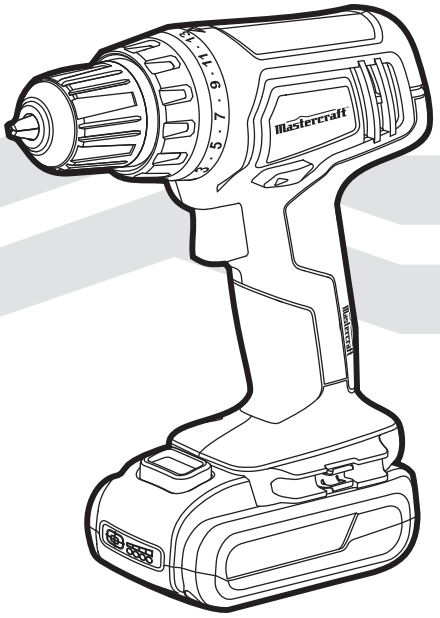

INSTRUCTION MANUAL

20V max* LITHIUM-ION CORDLESS DRILL/DRIVER

054-1332-6

If any parts are missing or damaged, or if you have any questions, please call our toll-free helpline at 1-800-689-9928.

Read and understand this instruction manual thoroughly before using the product. It contains important information for your safety as well as operating and maintenance advice.

Keep this instruction manual for future use. Should this product be passed on to a third party, then this instruction manual must be included.

TABLE OF CONTENTS

TECHNICAL SPECIFICATIONS	3
SAFETY GUIDELINES	4–10
DESCRIPTION	11
OPERATING INSTRUCTIONS	12–20
MAINTENANCE	21–22
TROUBLESHOOTING	23
PARTS LIST	24
WARRANTY	25–26

TECHNICAL SPECIFICATIONS

CORDLESS DRILL/DRIVER MODEL	5268
MOTOR	20 Volt DC
CHUCK	3/8" *(10 mm)* keyless chuck
NO-LOAD SPEED	0–600 RPM
MAX. TORQUE	115 in-lb
CLUTCH	23 + 1 positions
CORDLESS DRILL/DRIVER WEIGHT (WITHOUT BATTERY)	1 lb 12 oz *(0.8 kg)*
BATTERY TYPE	Lithium-Ion
BATTERY VOLTAGE	20 Volt max* DC
CHARGER INPUT	120 Volts, 60 Hz AC only
OPTIMUM CHARGING TEMPERATURE RANGE	0–40°C *(32°–104°F)*
CHARGING TIME	3–5 hours

*Maximum battery voltage without workload; with workload nominal voltage is 18V.

SAFETY GUIDELINES

WARNING!

Safety symbols in this Instruction Manual are used to flag possible dangers. The safety symbols and their explanations require your full understanding. The safety warnings do not, by themselves, eliminate any danger, nor are they substitutes for proper accident prevention measures.

WARNING!

This Safety Alert Symbol indicates caution, warning, or danger. Failure to obey a safety warning can result in serious injury to yourself or others. To reduce the risk of injury, fire, or electric shock, always follow the safety precautions.

Know your tool

To operate this tool, carefully read this Instruction Manual and all labels affixed to the Cordless Drill/Driver before using it. Keep this Instruction Manual available for future reference.

Important

This tool should only be serviced by a qualified service technician. For more information, call the toll-free helpline at 1-800-689-9928.

Read all instructions thoroughly

Save these instructions

General power tool safety warnings

WARNING!

Read all safety warnings and instructions. Failure to follow the warnings and instructions may result in electric shock, fire and/or serious injury.

Save all warnings and instructions for future reference.

The term “power tool” in the warnings refers to your mains-operated (corded) power tool or battery-operated (cordless) power tool.

Work area safety

- **Keep the work area clean and well lit.** Cluttered or dark areas invite accidents.
- **Do not operate power tools in explosive atmospheres, such as in the presence of flammable liquids, gases or dust.** Power tools create sparks, which may ignite the dust or fumes.
- **Keep children and bystanders away while operating a power tool.** Distractions can cause you to lose control.

Electrical safety

- **Power tool plugs must match the outlet. Never modify the plug in any way. Do not use any adapter plugs with earthed (grounded) power tools.** Unmodified plugs and matching outlets will reduce the risk of electric shock.
- **Avoid body contact with earthed or grounded surfaces such as pipes, radiators, ranges and refrigerators.** There is an increased risk of electric shock if your body is earthed or grounded.
- **Do not expose power tools to rain or wet conditions.** Water entering a power tool will increase the risk of electric shock.
- **Do not abuse the cord. Never use the cord for carrying, pulling or unplugging the power tool. Keep the cord away from heat, oil, sharp edges or moving parts.** Damaged or entangled cords increase the risk of electric shock.
- **When operating a power tool outdoors, use an extension cord suitable for outdoor use.** Use of a cord suitable for outdoor use reduces the risk of electric shock.
- **If operating a power tool in a damp location is unavoidable, use a ground-fault circuit interrupter (GFCI) protected supply.** Use of a GFCI reduces the risk of electric shock.

Personal safety

- **Stay alert, watch what you are doing and use common sense when operating a power tool. Do not use the tool while tired or under the influence of drugs, alcohol, or medication.** A moment of inattention while operating power tools may result in serious personal injury.
- **Use personal protective equipment. Always wear eye protection.** Protective equipment such as dust mask, non-skid safety shoes, hard hat, or hearing protection, used for appropriate conditions, will reduce personal injuries.
- **Prevent unintentional starting. Ensure the switch is in the off-position before connecting to power source and/or battery pack, picking up or carrying the tool.** Carrying power tools with your finger on the switch or energising power tools that have the switch on invites accidents.

- **Remove any adjusting key or wrench before turning the power tool on.** A wrench or a key left attached to a rotating part of the power tool may result in personal injury.
- **Do not overreach. Keep proper footing and balance at all times.** This enables better control of the power tool in unexpected situations.
- **Dress properly. Do not wear loose clothing or jewellery. Keep your hair, clothing and gloves away from moving parts.** Loose clothes, jewellery or long hair can be caught in moving parts.
- **If devices are provided for the connection of dust extraction and collection facilities, ensure that these are connected and properly used.** Use of these devices can reduce dust-related hazards.

Power tool use and care

- **Do not force the power tool. Use the correct power tool for your application.** The correct power tool will do the job better and more safely at the rate for which it was designed.
- **Do not use the power tool if the switch does not turn it on and off.** Any power tool that cannot be controlled with the switch is dangerous and must be repaired.
- **Disconnect the plug from the power source and/or the battery pack from the power tool before making any adjustments, changing accessories, or storing power tools.** Such preventive safety measures reduce the risk of starting the power tool accidentally.
- **Store idle power tools out of the reach of children and do not allow persons unfamiliar with the power tool or these instructions to operate the power tool.** Power tools are dangerous in the hands of untrained users.
- **Maintain power tools. Check for misalignment or binding of moving parts, breakage of parts and any other condition that may affect the power tool's operation. If damaged, have the power tool repaired before use.** Many accidents are caused by poorly maintained power tools.
- **Keep cutting tools sharp and clean.** Properly maintained cutting tools with sharp cutting edges are less likely to bind and are easier to control.
- **Use the power tool, accessories, tool bits, etc. in accordance with these instructions, taking into account the working conditions and the work to be performed.** Use of the power tool for operations different from those intended could result in a hazardous situation.

Battery tool use and care

- **Recharge only with the charger specified by the manufacturer.** A charger that is suitable for one type of battery pack may create a risk of fire when used with another battery pack.
- **Use power tools only with specifically designated battery packs.** Use of any other battery packs may create a risk of injury and fire.

- **When battery pack is not in use, keep it away from other metal objects like paper clips, coins, keys, nails, screws or other small metal objects that can make a connection from one terminal to another.** Shorting the battery terminals together may cause burns or a fire.
- **Under abusive conditions, liquid may be ejected from the battery; avoid contact. If contact accidentally occurs, flush with water. If liquid contacts eyes, also seek medical help.** Liquid ejected from the battery may cause irritation or burns.

Service

- **Have your power tool serviced by a qualified repair person using only identical replacement parts.** This will ensure that the safety of the power tool is maintained.

Safety guidelines for cordless drill/driver

- **Hold power tools by their insulated gripping surfaces when performing an operation where the tool may contact hidden wiring or its own cord.** Contact with a “live” wire may make exposed metal parts of the power tool “live” and could give the operator an electric shock.
- **When working with the power tool, always hold it firmly with both hands and provide for a secure stance.** The power tool is guided more securely with both hands.
- **Keep the cord and charger from heat to prevent damage to the housing or internal parts.**
- **Secure the workpiece.** Clamping devices or a vise are more effective than your hand for holding the workpiece in place.
- **Do not allow gasoline, oils, petroleum-based products, etc. to come in contact with plastic parts.** These materials contain chemicals that can damage, weaken, or destroy plastic.
- **Always wait until the machine has come to a complete stop before placing it down.** The tool insert can jam and lead to loss of control of the power tool.
- **Before performing any kind of work on the machine (e.g., maintenance, tool change, etc.) as well as when transporting and storing it, always set the direction-of-rotation switch to the centre (locked) position.** Unintentional activation of the On/Off switch may result in personal injury.
- **Do not open the battery.** There is risk of a short circuit.
- **Protect the battery from heat and fire.** There is risk of explosion.
- **Wear ear protectors when using the drill/driver.** Exposure to noise can cause hearing loss.
- **Use protective gloves when removing the bit from the tool, or first allow the bit to cool down.** The bit may be hot after prolonged use.
- **Use protective gloves when operating the tool.** Protective gloves can help to keep you from being burnt and hurt.

- **Keep your hands away from the motor-housing vents.** Hot gas comes from the vents during operation.
- **Release the trigger immediately when a screw is tightened to avoid breaking the screw.**
- **For best results, your battery tool should be charged in a location where the temperature is more that 0°C (32°F) but less that 40°C (104°F).** Do not store outside or in vehicles.
- **The label on your tool may include the following symbols. The symbols and their definitions are as follows:**

V ..... Volts

A ..... Amperes

Hz ..... Hertz

W ..... Watts

min ..... Minutes

∿ ..... Alternating current

⎓ ..... Direct current

n_0 ..... No load speed

⧈ ..... Class II Construction

…/min ..... Revolutions per minute

⏚ ..... Grounding terminal

BPM ..... Beats per minute

..... WARNING – To reduce the risk of injury, user must read instruction manual.

Safety guidelines for charger

WARNING!

Read and understand all instructions. Failure to follow all instructions listed below may result in electric shock, fire and/or serious personal injury.

WARNING!

To reduce the risk of electric shock or damage to the charger and battery, use only the batteries and charger listed.

Battery Pack	Charger
054-3124-0/5162	5331

- **Before using the battery charger,** read all instructions and cautionary markings in this Instruction Manual, on the battery charger, the battery and the product using the battery to prevent misuse of the products and possible injury or damage.
- **Do not use the charger outdoors or expose it to wet or damp conditions.** Water entering the charger will increase the risk of electric shock.
- **Use of an attachment not recommended and sold by the battery charger manufacturer may result in a risk of fire, electric shock or personal injury.** Following this rule will reduce the risk of electric shock, fire or serious personal injury.
- **Do not abuse the cord or charger.** Never use the cord to carry the charger. Do not pull the charger cord rather than the plug when disconnecting the plug from the receptacle. Damage to the cord or charger could occur and create an electric shock hazard. Replace damaged cords immediately.
- **Make sure that the cord is located so that it will not be stepped on, tripped over, come in contact with sharp edges or moving parts or otherwise be subjected to damage or stress.** This will reduce the risk of accidental falls, which could cause injury and damage to the cord, which could result in electric shock.
- **Keep the cord and charger from heat to prevent damage to the housing or internal parts.**
- **Do not let gasoline, oils, petroleum-based products, etc. come in contact with plastic parts.** They contain chemicals that can damage, weaken or destroy plastic.
- **An extension cord should not be used unless absolutely necessary.** Use of an improper extension cord could result in a risk of fire and electric shock. If an extension cord must be used, make sure that:
  - The pins on the plug of the extension cord are the same number, size and shape as the those of the plug on the charger.
  - The extension cord is properly wired and in good electrical condition.
  - The wire size is large enough for the AC ampere rating of the charger as specified below:

Cord Length (Feet)	25'	50'	100'
Cord Size (AWG)	16	16	16

NOTE: AWG = American Wire Gauge

- **Do not operate the charger with a damaged cord or plug,** which could cause shorting and electric shock. If damaged, have the charger repaired or replaced by a qualified service technician.
- **Do not operate the charger if it has received a sharp blow, been dropped or otherwise damaged in any way.** Take it to a qualified service technician for an electrical check to determine if the charger is in good working order.
- **Do not disassemble the charger.** Take it to a qualified service technician when service or repair is required. Incorrect reassembly may result in a risk of electric shock or fire.
- **Unplug the charger from outlet before attempting any maintenance or cleaning to reduce the risk of electric shock.**
- **Disconnect the charger from the power supply when it is not in use.** This will reduce the risk of electric shock or damage to the charger if metal items should fall into the opening. It will also help prevent damage to the charger during a power surge.
- **Risk of electric shock.** Do not touch the uninsulated portion of the output connector or the uninsulated battery terminal.
- **Save these instructions.** Refer to them frequently and use them to instruct others who may use this tool. If you lend this tool to someone, also lend these instructions to prevent misuse of the product and possible injury.

Package contents:

Cordless Drill/Driver, Battery Pack, Charger, 2 double-ended bits, Instruction Manual.

WARNING!

Remove the Cordless Drill/Driver from the package, and examine it carefully. Do not discard the carton or any packaging material until all parts have been examined.

WARNING!

If any part of the Cordless Drill/Driver is missing or damaged, do not attach the battery pack to the tool or use the tool until the part has been repaired or replaced. Failure to heed this warning could result in serious injury.

Know your cordless DRILL/DRIVER

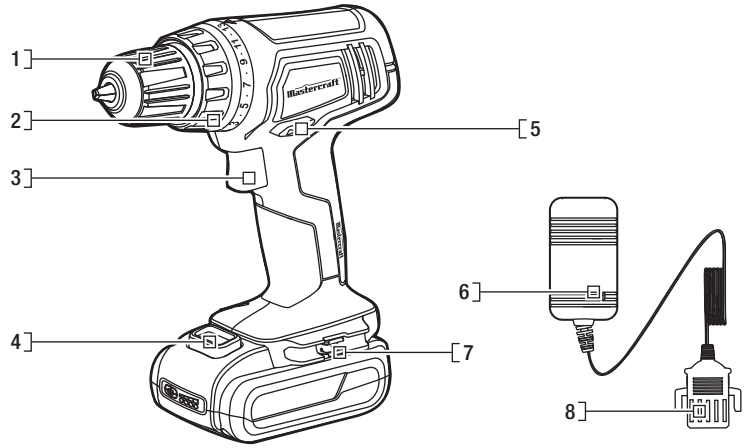

No.	Description	No.	Description
1	Keyless Chuck	5	Direction-of-Rotation Selector
2	Torque-Adjustment Ring	6	LED Charger Indicator
3	Trigger Switch	7	Bit Clip
4	Battery-Release Button	8	Charger Base

Before attempting to use this tool, become familiar with all of its operating features and safety requirements. For optimum performance and safety, read the following operating instructions carefully before using.

WARNING!

Do not allow familiarity with the Cordless Drill/Driver to cause a lack of alertness. A fraction of a second of carelessness is enough to cause severe injury.

Know your Lithium-Ion rechargeable battery

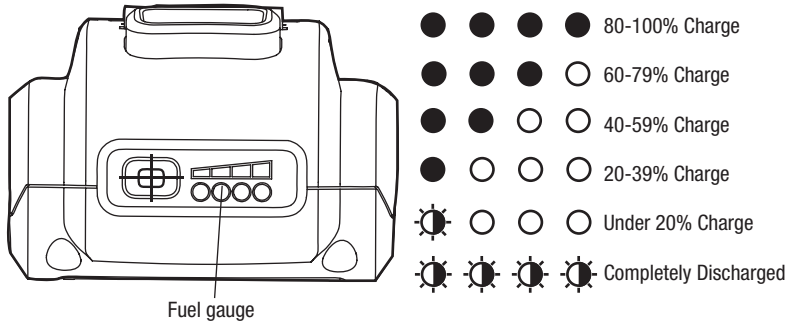

This Lithium-Ion battery pack is equipped with a Fuel Gauge, which displays the remaining charge of the battery pack. Press the Fuel Gauge button to display the LED lights. The LED lights will stay lit for approximately 4 seconds.

NOTE: The Fuel Gauge can be used when the battery pack is attached to or removed from the tool.

Low capacity warning

If one LED on the Fuel Gauge begins to flash, the battery pack's charge is under 20% capacity and should be recharged.

Unlike other battery pack types, Lithium-Ion battery packs deliver fade-free power for their entire run time. The tool will not experience a slow, gradual loss of power as you work. To signal that the battery pack is at the end of its run time and needs to be charged, power to the tool will drop quickly. The Fuel Gauge will begin to display four flashing LED lights when it is completely discharged. When this happens, remove the tool from the workpiece, remove the battery pack and charge the battery pack as needed.

Battery protection

To protect the battery from damage and prolong its life, the battery pack circuitry will turn off the battery pack if it becomes overloaded or if the temperature becomes too high during use. This may happen in extremely high torque, binding and stalling situations. The battery pack will begin normal operation when it cools down. The Fuel Gauge will display four flashing LED lights if the circuitry detects a momentary overload. You can conveniently reset the battery pack by releasing the power tool trigger switch. Press the Fuel Gauge button again to display the remaining charge.

NOTE: A significantly reduced run time after fully charging the battery pack indicates that the battery pack is near the end of its usable life and must be replaced.

NOTE: If the Fuel Gauge continues to flash four LED lights after reset, place the battery pack on the charger to evaluate the battery pack condition.

Cold weather operation

When the battery pack is very cold, it may “pulse” for the first minute of use to warm itself. Put the battery pack on the tool and use the tool in a light application. After about a minute, the battery pack will have warmed itself and will operate normally.

When to charge the battery pack

The Lithium-Ion battery can be charged at any time and will not develop a “memory” when charged after only a partial discharge. It is not necessary to run down the battery pack charge before recharging. Remove the battery pack from the tool when it is convenient for you and your job.

1. Use the Fuel Gauge to determine when you need to recharge the battery pack.
2. You can “top-off” your battery pack’s charge before starting a big job or long period of use.
3. Due to Lithium-Ion’s fade-free properties, the only time it is necessary to charge the Lithium- Ion battery pack is when the pack has reached the end of its charge. To signal the end of charge, power to the tool will drop quickly. Charge the battery pack as needed.

How to charge the battery pack *(fig 1)*

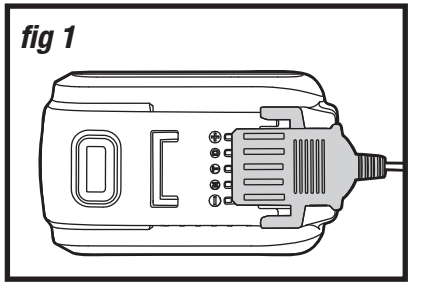

NOTE: This Lithium-Ion battery pack is shipped partially charged. Before using it the first time, fully charge the battery pack.

A fully discharged battery pack will charge in about 3–5 hours in a surrounding temperature between 0°C (32°F) and 40°C (104°F).

1. Charge the Lithium-Ion battery pack with the correct charger (5331).
2. Align the raised electric contacts on the charging base with the corresponding slots in the battery pack, and slide the charging base onto the battery pack (fig 1).
3. Connect the charger to a power supply.
4. The charger will communicate with the battery pack’s circuitry to evaluate the condition of the battery pack.
5. The Fuel Gauge LED lights will cycle from right to left during charging. This is part of the normal charging operation.
6. After charging is complete, the green LED on the charger will be on and the Fuel Gauge LED lights will turn off. The Fuel Gauge LED lights will not be displayed when the Fuel Gauge button is pressed while the battery pack is on the charger.
7. The battery pack will fully charge, but will not overcharge, if left on the charger.

LED indicator on charger

LED Indicator	Battery Pack Status	Red LED	Green LED	Explanation
HI/LO TEMP. (SEE MANUAL)	Hot/Cold battery	ON	-------	Charging will begin when battery returns to 0°CF (32°F)–40°C (104°F)
DEFECTIVE BATTERY	Defective	Flashing	--------	Battery pack is defective
BATTERY CHARGING	Charging	--------	Flashing	Charging
BATTERY FULL	Fully charged	--------	ON	Charging is complete

To attach battery pack *(fig 2)*

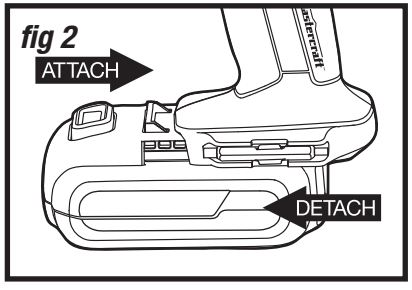

CAUTION!

Avoid the possibility of accidental starting. Always take care not to activate the trigger switch when you are attaching the battery pack or performing other adjustments to the tool.

NOTE: When placing a battery pack on the tool, be sure that the raised rib on the battery pack aligns with the groove on the cordless drill/driver and the latches snap into place properly. Improper assembly of the battery pack can cause damage to internal components.

1. Lock the trigger switch on the drill/driver by placing the direction-of-rotation (forward/centre-lock/reverse) selector in the centre position.
2. Align the raised portion on the battery pack with the groove on the bottom of the drill/driver, and then attach the battery pack to the drill/driver as shown.
3. Make sure that the latch on the battery pack snaps into place and that the battery pack is secured to the drill/driver before beginning operation.

To detach battery pack *(fig 2)*

CAUTION!

Avoid the possibility of accidental starting. Always take care not to activate the trigger switch when you are detaching the battery pack or performing other adjustments to the tool.

1. Lock the trigger switch on the drill/driver by placing the direction-of-rotation selector (forward/centre-lock/reverse) in the centre position.
2. Depress the battery-release button located on the front of the battery pack to release the battery pack.
3. Pull forward on the battery pack to remove it from the drill/driver.

Trigger switch *(fig 3)*

To turn the drill/driver ON, depress the trigger switch. To turn it OFF, release the trigger switch.

Variable speed *(fig 3)*

The variable-speed trigger switch delivers higher speed with increased trigger pressure and lower speed with decreased trigger pressure.

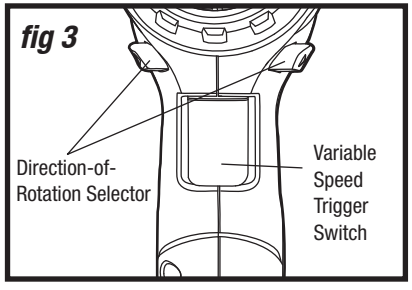

Direction-of-rotation selector *(forward/centre-lock reverse)* *(fig 4)*

The direction of rotation of the bit is reversible and is controlled with the direction-of-rotation selector located above the trigger switch. With the drill/driver held in normal operating position:

Position the direction-of-rotation selector to the left of the tool for forward rotation.

Position the direction-of-rotation selector to the right of the tool for reverse rotation.

Position the direction-of-rotation selector in the centre to lock the tool off.

NOTE: To prevent gear damage, always allow the drill/driver to come to a complete stop before changing the direction of rotation.

NOTE: The drill/driver will not run unless the direction-of-rotation selector is engaged fully to the left or right.

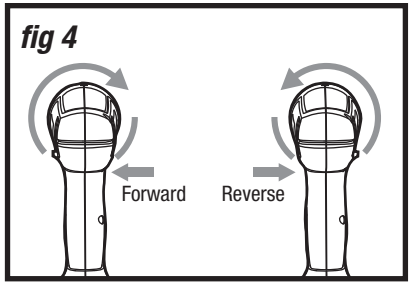

Electric brake

To stop the tool, release the trigger switch and allow the keyless chuck to come to a complete stop. The electric brake quickly stops rotation. This feature engages automatically when you release the trigger switch.

Keyless chuck *(fig 5)*

The arrows on the keyless chuck indicate the direction of rotation of the body of the chuck to GRIP (tighten) or OPEN (release) the jaws of the chuck on the drill/driver bit.

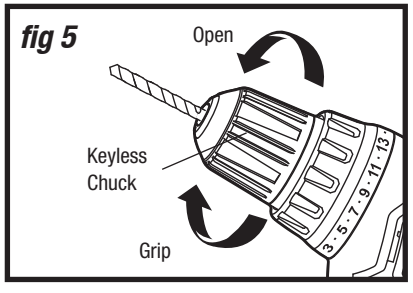

WARNING!

Do not hold the body of the keyless chuck with one hand while using the power of the drill/driver to tighten the jaws of the chuck on the drill bit. The body of the keyless chuck could slip in your hand, or your hand could slip and come into contact with the rotating bit. This could cause an accident and result in serious personal injury.

Adjustable torque clutch *(fig 6)*

The torque clutch can be adjusted to any of 24 different settings. The higher the torque setting, the more force the cordless drill/driver produces to turn an object.

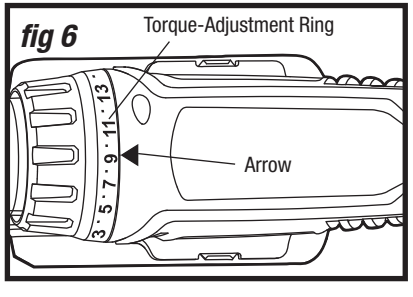

When using the cordless drill/driver for driving applications, it is necessary to increase or decrease the torque to help prevent damage to screw heads, threads, workpiece, etc.

Adjust the torque by rotating the torque-adjustment ring. The proper setting depends on the job and the type of bit, fastener, and material you will be using.

In general, use greater torque for larger screws, but if the torque is too high, the screws may be damaged or broken. For delicate operations, such as removing a partially stripped screw, use a low torque setting. For operations such as drilling into hardwood, use a higher torque setting.

NOTE: Do not change the torque setting when the tool is running.

Bit storage *(fig 7)*

When not in use, the bits that are provided with the cordless drill/driver may be stored on either side of the cordless drill/driver by snapping the bit into place in the bit clip.

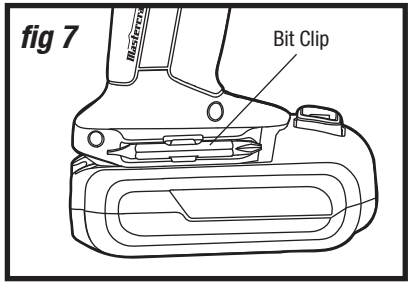

Installing a bit *(fig 8a)*

1. Lock the trigger switch by placing the direction-of-rotation selector in the OFF (centre) position.
2. Rotate the chuck in the “OPEN” direction to release the jaws of the chuck on the bit.
3. Insert the drill bit.
4. Rotate the chuck in the “GRIP” direction to tighten the jaws of the chuck securely on the bit.

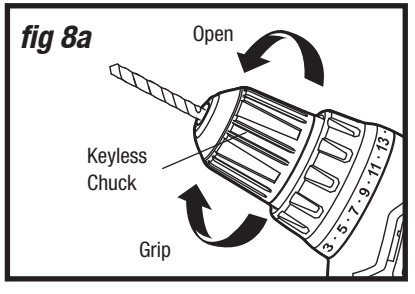

WARNING!

Be sure to insert the drill bit straight into the jaws of the chuck. Do not tighten the jaws of the chuck with the drill bit inserted at an angle (fig 8b). Doing so could cause the drill bit to be thrown from the drill/driver, which could result in possible serious personal injury or damage to the chuck.

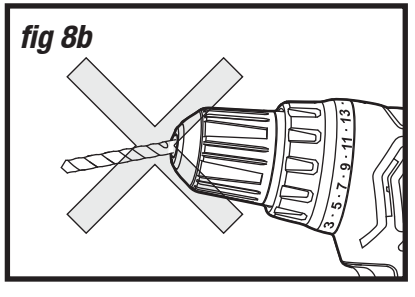

Removing a bit *(fig 8a)*

1. Lock the trigger switch by placing the direction-of rotation selector in the OFF (centre) position.
2. Rotate the chuck in the “OPEN” direction to release the jaws of the chuck on the bit.
3. Remove the drill bit.

WARNING!

Use protective gloves when removing the bit from the tool, or first allow the bit to cool down. The bit may be hot after prolonged use.

General drilling *(fig 9)*

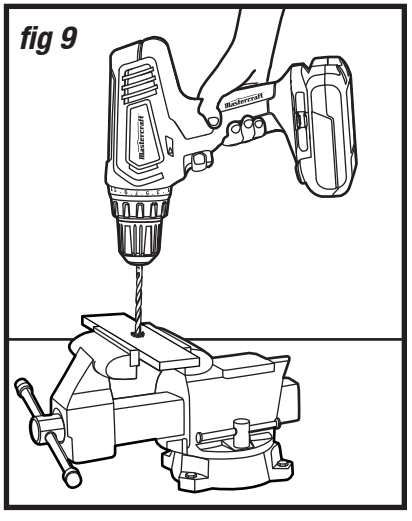

WARNING!

Always wear safety goggles or safety glasses with side shields during power tool operation or when blowing dust. If the operation is dusty, also wear a dust mask.

1. Use a vise or clamps to secure the material to be drilled to keep it from turning as the drill bit rotates.
2. Check the direction-of-rotation selector for the correct setting (forward or reverse).
3. Hold the cordless drill/driver firmly, and place the bit at the point to be drilled.
4. Depress the trigger switch to start the cordless drill/driver.
5. Move the drill bit into the workpiece, applying only enough pressure to keep the bit cutting.
6. Do not force the cordless drill/driver or apply sideways pressure to elongate a hole. Allow the tool to do the work.
7. When drilling hard, smooth surfaces, use a centre punch to mark the desired location of the hole. This will prevent the drill bit from slipping off-centre when the hole is started.
8. When drilling metal, use light oil on the drill bit to prevent it from overheating. The oil will prolong the life of the bit and will increase the drilling efficiency.
9. If the bit jams in the workpiece or if the drill/driver stalls, stop the tool immediately. Reverse the direction of rotation and gently squeeze the trigger switch to remove the bit from the workpiece. Investigate and correct the cause of jamming before resuming work.

WARNING!

Be prepared for binding when the bit breaks through the workpiece, because the drill/driver has a tendency to grab and kick opposite to the direction of rotation, which could cause a loss of control. If the operator is not prepared, this loss of control could result in serious injury.

Drilling mode operation

For drilling in wood, use twist bits, spade bits, power auger bits or hole saws.

1. When drilling “through” holes, place a block of wood behind the workpiece to prevent ragged or splintered edges on the back side of the hole.
2. Select the desired speed to match the planned operation.
3. Begin drilling at a very low speed to prevent the bit from slipping off the starting point, and then increase the speed as the drill bit bites into the material.
4. If the drill/driver stalls, it is usually because it is being overloaded. Release the trigger switch immediately, reverse the direction of rotation and gently squeeze the trigger switch to remove the bit from the workpiece. Investigate and correct the cause of stalling before resuming work.
5. Keep the motor running when pulling the bit back out of the drilled hole. This will prevent jamming.

FOR DRILLING IN METAL, USE HIGH-SPEED STEEL TWIST DRILL BITS.

1. Use light oil on the drill bit to keep it from overheating; the oil will prolong the life of the bit and increase the drilling action.
2. When drilling a large hole, first use a smaller bit to drill a small pilot hole to prevent the larger bit from slipping.
3. Select the desired speed to match the planned operation. Begin drilling at a very low speed to prevent the bit from slipping off the starting point. Maintain a speed and pressure that allows cutting without overheating the bit.
4. If the drill/driver stalls, it is usually because it is being overloaded. Release the trigger switch immediately, reverse the direction of rotation and gently squeeze the trigger switch to remove the bit from the workpiece. Investigate and correct the cause of stalling before resuming work.
5. Keep the motor running when pulling the bit back out of drilled hole. This will prevent jamming.

Screwdriver operation

1. Select the desired speed/torque range to match the planned operation.
2. Attach the desired fastener accessory into the chuck.
3. Make a few practice runs in a scrap piece before working.

General maintenance

WARNING!

To avoid personal injury, always remove the battery pack from the tool when cleaning or performing any maintenance.

WARNING!

Do not let brake fluids, gasoline, petroleum-based products, penetrating oil, etc. come into contact with plastic parts. These substances contain chemicals that can damage, weaken, or destroy plastic.

The tool may be cleaned most effectively with compressed dry air. Always wear safety goggles when cleaning tools with compressed air. Before each use:

- Inspect the cordless drill/driver, the trigger switch, and the cord for damage.
- Check for damaged, missing, or worn parts.
- Check for loose screws, misalignment or binding of moving parts, or any other condition that may affect the operation.
- If abnormal vibration or noise occurs, turn the cordless drill/driver off immediately, and have the problem corrected before further use.

WARNING!

When servicing, use only identical replacement parts. The use of any other parts may create a hazard or cause damage to the product.

WARNING!

Use only accessories that are recommended for this drill/driver by the manufacturer. Accessories that may be suitable for one tool may become hazardous when used with another tool.

WARNING!

To ensure safety and reliability, all repairs should be performed by a qualified service technician.

Removing the battery pack and preparation for recycling

To preserve natural resources, please recycle or dispose of the batteries properly. This product contains Lithium-Ion batteries. Provincial or municipal laws may prohibit disposal of Lithium-Ion batteries in ordinary trash. Consult the local waste authority for information regarding available recycling and/or disposal options.

WARNING!

Upon removal of the battery pack for disposal or recycling, cover the battery pack's terminals with heavy-duty adhesive tape. Do not attempt to destroy or disassemble the battery pack or remove any of its components. Lithium-Ion batteries must be recycled or disposed of properly. Never touch both terminals with metal objects and/or body parts, as a short circuit may result. Keep away from children. Failure to comply with these warnings could result in fire and/or serious injury.

Chuck removal *(fig 10)*

The chuck can be removed and replaced with a new one.

1. Lock the trigger switch by placing the direction-of-rotation selector in the centre position.
2. Open the chuck jaws. Using a screwdriver, remove the chuck screw by turning it clockwise,
3. Insert a 5/16-in. or larger hex key into the chuck of the drill/driver and tighten the chuck jaws securely.
4. Tap the hex key sharply with a mallet in a counter-clockwise direction. This will loosen the chuck for easy removal.
5. Attach a new chuck to the spindle and tighten the chuck screw.

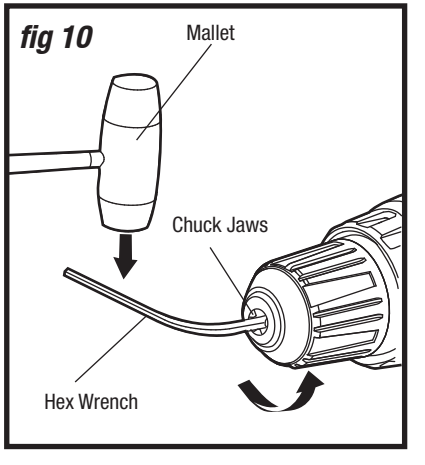

TROUBLESHOOTING

PROBLEM	CAUSE OF THE PROBLEM	SUGGESTED CORRECTIVE ACTION
The drill/driver does not work	Battery is depleted	Charge the battery
Bit cannot be installed	Chuck is not opened	Open the chuck
	Bit does not fit the chuck	Use suitable bit
Motor overheating	Be sure cooling vents are free from dust and obstacles	Clean, clear vents. Do not cover vents with hand during operation

If the problem remains unsolved after performing the checks described above, call the toll-free helpline at 1-800-689-9928.

PARTS LIST

Exploded view

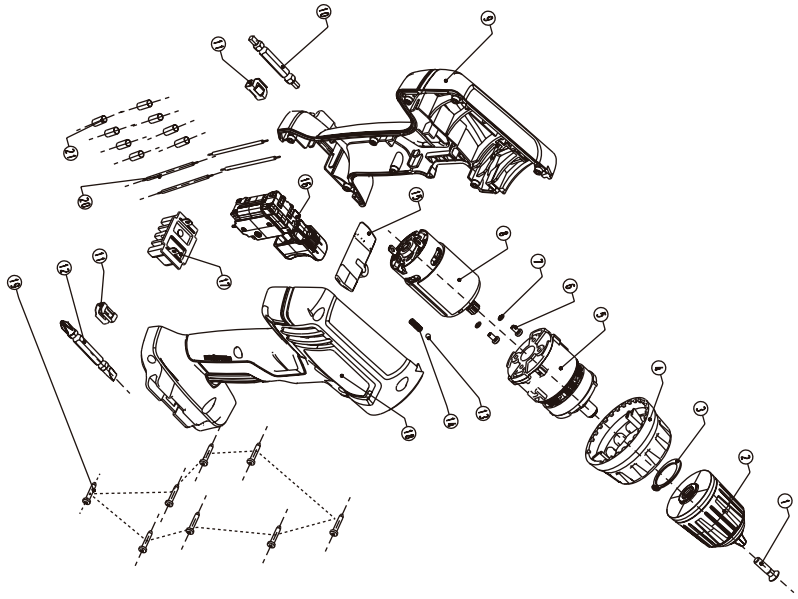

No.	Part No.	Description	No.	Part No.	Description
1	5620179000	Screw (L.H.)	12	3810357000	Screw Bit
2	3860086000	Chuck	13	5700178000	Steel Ball
3	5660176000	Circlip For Shaft	14	3660466000	Compression Spring
4	3126505000	Clutch Cup	15	3126501000	F/R Button
5	2790313000	Gear Case A Assembly	16	4870452000	Trigger Switch
6	5620031000	Screw	17	3402577000	Contact Receptacle Assembly
7	5650003000	Spring Washer	18	3321395000	Right Housing Assembly
8	2790314000	Motor A and Gear Assembly	19	5610013000	Tapping Screw
9	3321394000	Left Housing Assembly	20	4860003000	Inner Wire
10	3810405000	Screw Bits	21	4920156000	Shrinkable Tube
11	3703673000	Bits Holder			

If any parts are missing or damaged, or if you have any questions, please call the Toll-free Helpline, at 1-800-689-9928.

This Mastercraft product is guaranteed **three (3) years from the date of original retail purchase** against defects in materials and workmanship, except for the following components:

a) Component A: Batteries, chargers and carrying case, which are guaranteed for a period of 2 years from the date of original retail purchase against defects in workmanship and materials;

b) Component B: Accessories, which are guaranteed for a period of 1-year from the date of original retail purchase against defects in workmanship and materials.

Subject to the conditions and limitations described below, this product, if returned to us with proof of purchase within the stated warranty period and if covered under this warranty, will be repaired or replaced (with the same model, or one of equal value or specification), at our option. We will bear the cost of any repair or replacement and any costs of labour relating thereto.

These warranties are subject to the following conditions and limitations:

a) a bill of sale verifying the purchase and purchase date must be provided;

b) this warranty will not apply to any product or part thereof which is worn or broken or which has become inoperative due to abuse, misuse, accidental damage, neglect or lack of proper installation, operation or maintenance (as outlined in the applicable owner's manual or operating instructions) or which is being used for industrial, professional, commercial or rental purposes;

c) this warranty will not apply to normal wear and tear or to expendable parts or accessories that may be supplied with the product which are expected to become inoperative or unusable after a reasonable period of use;

d) this warranty will not apply to routine maintenance and consumable items such as, but not limited to, fuel, lubricants, vacuum bags, blades, belts, sandpaper, bits, fluids, tune-ups or adjustments;

e) this warranty will not apply where damage is caused by repairs made or attempted by others (i.e. persons not authorized by the manufacturer);

f) this warranty will not apply to any product that was sold to the original purchaser as a reconditioned or refurbished product (unless otherwise specified in writing);

g) this warranty will not apply to any product or part thereof if any part from another manufacturer is installed therein or any repairs or alterations have been made or attempted by unauthorized persons;

h) this warranty will not apply to normal deterioration of the exterior finish, such as, but not limited to, scratches, dents, paint chips, or to any corrosion or discolouring by heat, abrasive and chemical cleaners; and

i) this warranty will not apply to component parts sold by and identified as the product of another company, which shall be covered under the product manufacturer's warranty, if any.

Additional limitations

This warranty applies only to the original purchaser and may not be transferred. Neither the retailer nor the manufacturer shall be liable for any other expense, loss or damage, including, without limitation, any indirect, incidental, consequential or exemplary damages arising in connection with the sale, use or inability to use this product.

Notice to consumer

This warranty gives you specific legal rights, and you may have other rights, which may vary from province to province. The provisions contained in this warranty are not intended to limit, modify, take away from, disclaim or exclude any statutory warranties set forth in any applicable provincial or federal legislation.

IMPORTED BY MASTERCRAFT CANADA TORONTO, CANADA M4S 2B8