model no. 054-4892-4

Mastercraft® MD

CORDED ROTARY TOOL KIT

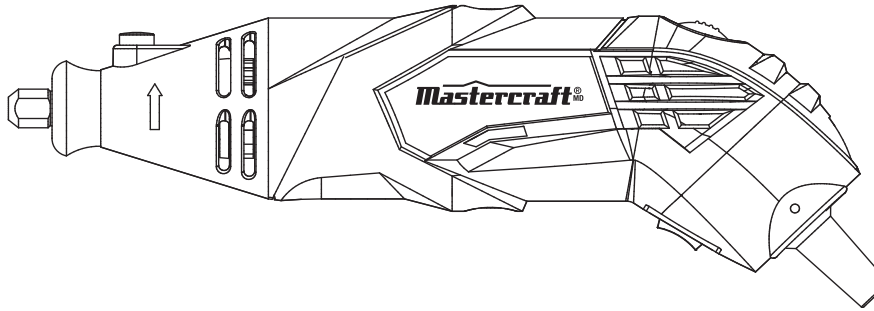

IMPORTANT:
Please read this manual carefully before running this rotary tool and save it for reference.

INSTRUCTION MANUAL

TABLE OF CONTENTS

Technical specifications	4
General power tool safety warnings	5
General safety warnings for rotary tool	7
Symbols	10
Key parts diagram	11
Accessories	12
Parts list	13
Operating instructions	14
Maintain tools with care	19
Warranty	20

NOTE:
If any parts are missing or damaged, or if you have any questions, please call our toll-free helpline at 1-800-689-9928.

SAVE THESE INSTRUCTIONS
This manual contains important safety and operating instructions. Read all instructions and follow them with use of this product.

TECHNICAL SPECIFICATIONS

Voltage:	120 V 60 Hz AC
Amps:	1.4 A
No-load speed:	8000–32,000 RPM
Collet capacity	1/16”(1.6mm)x2; 3/32”(2.4mm) x 2;1/8” (3.2 mm) x 2
Protection class	⧈ /II
Cord length	6’ (1.8 m)
Machine weight:	1 lb 6 oz (0.63 kg)

WORK AREA SAFETY

- **Keep work area clean and well lit.** Cluttered or dark areas invite accidents.
- **Do not operate power tools in explosive atmospheres, such as in the presence of flammable liquids, gases or dust.** Power tools create sparks which may ignite the dust or fumes.
- **Keep children and bystanders away while operating a power tool.** Distractions can cause you to lose control.

ELECTRICAL SAFETY

- **Power tool plugs must match the outlet. Never modify the plug in any way.** Do not use any adapter plugs with earthed (grounded) power tools. Unmodified plugs and matching outlets will reduce risk of electric shock.
- **Avoid body contact with earthed or grounded surfaces such as pipes, radiators, ranges and refrigerators.** There is an increased risk of electric shock if your body is earthed or grounded.
- **Do not expose power tools to rain or wet conditions.** Water entering a power tool will increase the risk of electric shock.
- **Do not abuse the cord. Never use the cord for carrying, pulling or unplugging the power tool. Keep cord away from heat, oil, sharp edges or moving parts.** Damaged or entangled cords increase the risk of electric shock.
- **When operating a power tool outdoors, use an extension cord suitable for outdoor use.** Use of a cord suitable for outdoor use reduces the risk of electric shock.
- **If operating a power tool in a damp location is unavoidable, use a residual current device (RCD) protected supply.** Use of an RCD reduces the risk of electric shock.

WARNING!
Some dust created by power sanding, sawing, grinding, drilling and other construction activities contains chemicals known to cause cancer, birth defects or other reproductive harm. Some examples of these chemicals are:

- Lead from lead-based paints.
- Crystalline silica from bricks, cement and other masonry products.
- Arsenic and chromium from chemically-treated lumber.

Your risk from these exposures varies, depending on how often you do this type of work. To reduce your exposure to these chemicals, work in a well-ventilated area, and work with approved safety equipment, such as those dust masks that are specially designed to filter out microscopic particles.

WARNING!
This product may contain lead, phthalates or other chemicals known to cause cancer, birth defects and other reproductive harm. Please wash your hands after use.

WARNING!
Read all safety warnings and instructions. Failure to follow the warnings and instructions may result in electric shock, fire and/or serious injury.

Save all warnings and instructions for future reference.

The term power tool in the warnings refers to your electric (corded) power tool or battery-operated (cordless) power tool.

PERSONAL SAFETY

- **Stay alert, watch what you are doing and use common sense when operating a power tool. Do not use a power tool while you are tired or under the influence of drugs, alcohol or medication.** A moment of inattention while operating power tools may result in serious personal injury.
- **Use personal protective equipment. Always wear eye protection.** Protective equipment such as dust mask, non-skid safety shoes, hard hat, or hearing protection used for appropriate conditions will reduce personal injuries.
- **Prevent unintentional starting. Ensure the switch is in the off-position before connecting to power source and/or battery pack, picking up or carrying the tool.** Carrying power tools with your finger on the switch or energizing power tools that have the switch on invites accidents.
- **Remove any adjusting key or wrench before turning the power tool on.** A wrench or a key left attached to a rotating part of the power tool may result in personal injury.
- **Do not overreach. Keep proper footing and balance at all times.** This enables better control of the power tool in unexpected situations.
- **Dress properly. Do not wear loose clothing or jewellery. Keep your hair, clothing and gloves away from moving parts.** Loose clothes, jewellery or long hair can be caught in moving parts.
- **If devices are provided for the connection of dust extraction and collection facilities, ensure these are connected and properly used.** Use of dust collection can reduce dust-related hazards.

POWER TOOL USE AND CARE

- **Do not force the power tool. Use the correct power tool for your application.** The correct power tool will do the job better and safer at the rate for which it was designed.
- **Do not use the power tool if the switch does not turn it on and off.** Any power tool that cannot be controlled with the switch is dangerous and must be repaired.
- **Disconnect the plug from the power source and/or the battery pack from the power tool before making any adjustments, changing accessories, or storing power tools.** Such preventive safety measures reduce the risk of starting the power tool accidentally.
- **Store idle power tools out of the reach of children and do not allow persons unfamiliar with the power tool or these instructions to operate the power tool.** Power tools are dangerous in the hands of untrained users.
- **Maintain power tools. Check for misalignment or binding of moving parts, breakage of parts and any other condition that may affect the power tool's operation.** If damaged, have the power tool repaired before use. Many accidents are caused by poorly maintained power tools.
- **Keep cutting tools sharp and clean.** Properly maintained cutting tools with sharp cutting edges are less likely to bind and are easier to control.
- **Use the power tool, accessories and tool bits etc., in accordance with these instructions and in the manner intended for the particular type of power tool, taking into account the working conditions and the work to be performed.** Use of the power tool for operations different from those intended could result in a hazardous situation.

SERVICE

- **Have your power tool serviced by a qualified repair person using only identical replacement parts.** This will ensure that the safety of the power tool is maintained.

GENERAL SAFETY WARNINGS FOR ROTARY TOOL

Safety warnings common for grinding, sanding, wire brushing, polishing or abrasive cutting-off operations:

This power tool is intended to function as a grinder, sander, wire brush, polisher or cut-off tool. Read all safety warnings, instructions, illustrations and specifications provided with this power tool. Failure to follow all instructions listed below may result in electric shock, fire and/or serious injury.

Do not use accessories which are not specifically designed and recommended by the tool manufacturer. Just because the accessory can be attached to your power tool does not assure safe operation.

The RATED SPEED of the accessories must be at least equal to the operating speed setting marked on the power tool. Accessories running faster than their RATED SPEED can break and fly apart.

The outside diameter and the thickness of your accessory must be within the capacity rating of your power tool. Incorrectly sized accessories cannot be adequately controlled.

The arbour size of wheels, sanding drums or any other accessory must properly fit the spindle or collet of the power tool. Accessories that do not match the mounting hardware of the power tool will run out of balance, vibrate excessively and may cause loss of control.

Mandrel mounted wheels, sanding drums, cutters or other accessories must be fully inserted into the collet or chuck. If the mandrel is insufficiently held and/or the overhang of the wheel is too long, the mounted wheel may become loose and be ejected at high velocity.

Do not use a damaged accessory. Before each use inspect the accessory such as abrasive wheels for chips and cracks, sanding drum for cracks, tear or excess wear, wire brush for loose or cracked wires. If power tool or accessory is dropped, inspect for damage or install an undamaged accessory. After inspecting and installing an accessory, position yourself and bystanders away from the plane of the rotating accessory and run the power tool at maximum no-load speed for one minute. Damaged accessories will normally break apart during this test time.

Wear personal protective equipment. Depending on application, use face shield, safety goggles or safety glasses. As appropriate, wear dust mask, hearing protectors, gloves and workshop apron capable of stopping small abrasive or workpiece fragments. The eye protection must be capable of stopping flying debris generated by various operations. The dust mask or respirator must be capable of filtering out particles generated by your operation. Prolonged exposure to high high-intensity noise may cause hearing loss.

Keep bystanders a safe distance away from work area. Anyone entering the work area must wear personal protective equipment. Fragments of workpiece or of a broken accessory may fly away and cause injury beyond immediate area of operation.

Hold power tool by insulated gripping surfaces only, when performing an operation where the cutting accessory may contact hidden wiring or its own delete comma . Cutting accessory contacting a “live” wire may make exposed metal parts of the power tool “live” and could give the operator an electric shock.

Always hold the tool firmly in your hand(s) during the start-up. The reaction torque of the motor, as it accelerates to full speed, can cause the tool to twist.

Use clamps to support workpiece whenever practical. Never hold a small workpiece in one hand and the tool in the other hand while in use. Clamping a small workpiece allows you to use your hand(s) to control the tool. Round material such as dowel rods, pipes or tubing have a tendency to roll while being cut, and may cause the bit to bind or jump toward you.

Position the cord clear of the spinning accessory. If you lose control, the cord may be cut or snagged and your hand or arm may be pulled into the spinning accessory.

Never lay the power tool down until the accessory has come to a complete stop. The spinning accessory may grab the surface and pull the power tool out of your control.

After changing the bits or making any adjustments, make sure the collet nut, chuck or any other adjustment

devices are securely tightened. Loose adjustment devices can unexpectedly shift, causing loss of control, and loose, rotating, components will be violently thrown.

Do not run the power tool while carrying it at your side. Accidental contact with the spinning accessory could snag your clothing, pulling the accessory into your body.

Regularly clean the power tool's air vents. The motor's fan will draw the dust inside the housing and excessive accumulation of powdered metal may cause electrical hazards.

Do not operate the power tool near flammable materials. Sparks could ignite these materials.

Do not use accessories that require liquid coolants. Using water or other liquid coolants may result in electrocution or shock.

Instruction that the maximum recommended diameter of mounted wheels, threaded cones and plugs shall not exceed 2 3/16" (55 mm) and that the maximum recommended diameter of sanding accessories shall not exceed 3 1/8" (80 mm).

KICKBACK AND RELATED WARNINGS:

Kickback is a sudden reaction to a pinched or snagged rotating wheel, sanding band, brush or any other accessory. Pinching or snagging causes rapid stalling of the rotating accessory which in turn causes the uncontrolled power tool to be forced in the direction opposite of the accessory's rotation.

For example, if an abrasive wheel is snagged or pinched by the workpiece, the edge of the wheel that is entering into the pinch point can dig into the surface of the material causing the wheel to climb out or kick out. The wheel may either jump toward or away from the operator, depending on direction of the wheel's movement at the point of pinching. Abrasive wheels may also break under these conditions.

Kickback is the result of power tool misuse and/or incorrect operating procedures or conditions and can be avoided by taking proper precautions as given below.

- Maintain a firm grip on the power tool and position your body and arm to allow you to resist kickback forces. The operator can control kickback forces, if proper precautions are taken.
- Use special care when working corners, sharp edges etc. Avoid bouncing and snagging the accessory. Corners, sharp edges or bouncing have a tendency to snag the rotating accessory and cause loss of control or kickback.
- Do not attach a toothed saw blade. Such blades create frequent kickback and loss of control.
- Always feed the bit into the material in the same direction as the cutting edge is exiting from the material (which is the same direction as the chips are thrown). Feeding the tool in the wrong direction causes the cutting edge of the bit to climb out of the work and pull the tool in the direction of this feed.
- When using rotary files, cut-off wheels, high-speed cutters or tungsten carbide cutters, always have the work securely clamped. These wheels will grab if they become slightly canted in the groove, and can kickback. When a cut-off wheel grabs, the wheel itself usually breaks. When a rotary file, high-speed cutter or tungst carbide cutter grabs, it may jump from the groove and you could lose control of the tool.

SAFETY WARNINGS SPECIFIC FOR GRINDING AND ABRASIVE CUTTING-OFF OPERATIONS:

Use only wheel types that are recommended for your power tool and only for recommended applications. For example: do not grind with the side of a cut-off wheel. Abrasive cut-off wheels are intended for peripheral grindin side forces applied to these wheels may cause them to shatter.

For threaded abrasive cones and plugs use only undamaged wheel mandrels with an unrelieved shoulder flange that are of correct size and length. Proper mandrels will reduce the possibility of breakage.

Do not “jam” a cut-off wheel or apply excessive pressure. Do not attempt to make an excessive depth of cut. Overstressing the wheel increases the loading and susceptibility to twisting or snagging of the wheel in the cut and the possibility of kickback or wheel breakage.

Do not position your hand in line with and behind the rotating wheel. When the wheel, at the point of operation, is moving away from your hand, the possible kickback may propel the spinning wheel and the power tool directly at you.

When wheel is pinched, snagged or when interrupting a cut for any reason, switch off the power tool and hold the power tool motionless until the wheel comes to a complete stop. Never attempt to remove the cut-off wheel from the cut while the wheel is in motion otherwise kickback may occur. Investigate and take corrective action to eliminate the cause of wheel pinching or snagging.

Do not restart the cutting operation in the workpiece. Let the wheel reach full speed and carefully re-enter the cut. The wheel may bind, walk up or kickback if the power tool is restarted in the workpiece.

Support panels or any oversized workpiece to minimize the risk of wheel pinching and kickback. Large workpieces tend to sag under their own weight. Supports must be placed under the workpiece near the line of cut and near the edge of the workpiece on both sides of the wheel.

Use extra caution when making a “pocket cut” into existing walls or other blind areas. The protruding wheel may cut gas or water pipes, electrical wiring or objects that can cause kickback.

ADDITIONAL SAFETY INSTRUCTIONS FOR WIRE BRUSHING OPERATIONS

SAFETY WARNINGS SPECIFIC FOR WIRE BRUSHING OPERATIONS:

Be aware that wire bristles are thrown by the brush even during ordinary operation. Do not overstress the wires by applying excessive load to the brush. The wire bristles can easily penetrate light clothing and/or skin.

Allow brushes to run at operating speed for at least one minute before using them. During this time no one is to stand in front or in line with the brush. Loose bristles or wires will be discharged during the run-in time.

Direct the discharge of the spinning wire brush away from you. Small particles and tiny wire fragments may be discharged at high velocity during the use of these brushes and may become imbedded in your skin.

WARNING!
Read all safety warnings and all instructions. Failure to follow the warnings and instructions may result in serious injury.

SYMBOLS

	To reduce the risk of injury, user must read instruction manual
	Double insulation
	Warning
	Wear ear protection
	Wear eye protection
	Wear dust mask
	Don’t use in the rain

KEY PARTS DIAGRAM

No.	Description
1	Collet nut + collet (fitted)
2	Spindle lock button
3	Carbon brush cover (on both sides)
4	Variable speed selector

No.	Description
5	Power cord
6	On/Off Switch

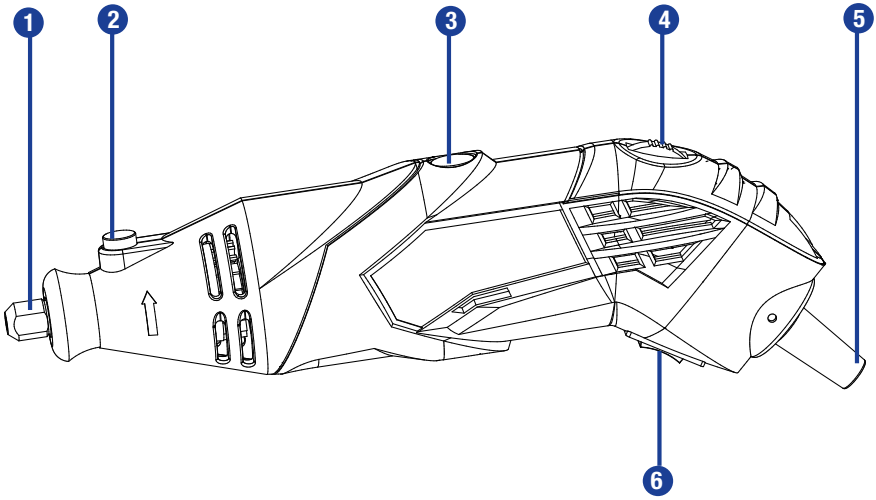

Not all the accessories illustrated or described are included in standard delivery.

ACCESSORIES

Collet (2 x Ø1.6 mm, 2 x Ø2.3 mm, 2 x Ø3.2 mm)	6
Big sanding drum (12.7 x 12.7 mm)	4
Small sanding drum (6.3 x 12.7 mm)	4
Rubber sanding roll (12.7 x 12.7 mm, 6.3 x 12.7 mm, shank Ø3.2 mm)	2
Brush (shank Ø3.2 mm)	6
HSS (high-speed steel) cutter (shank Ø3.2 mm)	2
HSS (high-speed steel) twist drill bits (shank Ø1.6 mm, Ø2.3 mm, Ø3.2 mm)	3
Diamond grinding bit (shank Ø3.2 mm)	6
Grinding bit (shank Ø3.2 mm)	10
Mandrel for saw blade (shank Ø3.2 mm)	1
Saw blade	1
Mandrel for cutting disc (shank Ø3.2 mm)	1
Cutting disc	88
Mandrel for wool polishing wheel (shank Ø3.2 mm)	1
Big wool polishing wheel (6.3 x 25.4 mm)	2
Small wool polishing wheel (6.3 x 12.7 mm)	4
Ball wool polishing wheel (9.5 x 19 mm)	1
Rubber polishing wheels (4 x 22 mm)	2
Cloth wheel (4.5 x 25 mm)	1
Grinding disc (3.2 x 20 mm)	12
Polishing compound	1
Fine sanding paper	30
Medium sanding paper	30
Coarse sanding paper	30
Grinding stone	1
Wrench	1

We recommend that you purchase your accessories from the same store that sold you the tool. Use good-quality accessories marked with a well-known brand name. Choose the type according to the work you intend to undertake. Refer to the accessory packaging for further details. Store personnel can assist you and offer advice.

PARTS LIST

No.	Description	Qty.
1	Collet nut	1
2	Collet	1
3	Nose cap	1
4	Spindle lock button	1
6	Bearing	2
8	Rotor	1
9	Left/right housing	1
10	Carbon brush set (pair)	1
11	Screw	6

No.	Description	Qty.
12	Variable speed botton	1
13	Stator	1
14	PCB	1
15	Switch	1
16	Hanger	1
17	Cord sleeve	1
19	Power cord	1

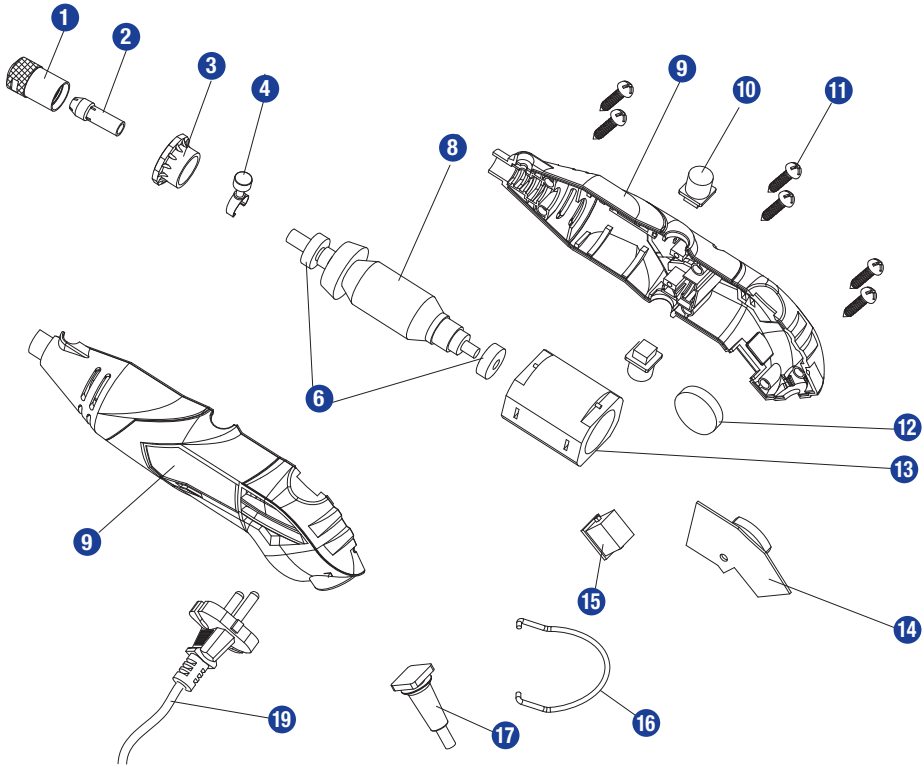

OPERATING INSTRUCTIONS

REPLACING THE COLLET (FIG. A)

Six sizes of collets are provided to accommodate the different accessories shank sizes.

Press the spindle lock button (2) and turn the collet nut (1) counter-clockwise with the supplied wrench. Remove the collet nut and inner collet, and then insert one appropriately-sized collet into the spindle. Reinstall the collet nut to finger tight. Do not over-tighten the collet nut when there is no accessory in the collet. Finally release the spindle lock button.

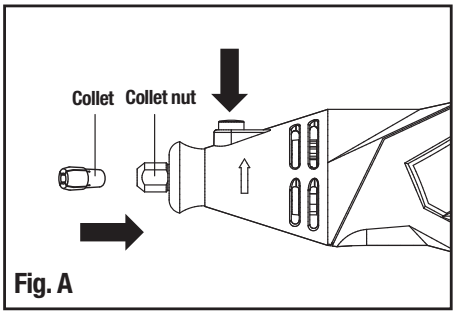

Fig. A

FITTING AN ACCESSORY (FIG. B, C)

Press the spindle lock button (2) and turn the collet nut (1) counter-clockwise with the supplied wrench. Then insert the mandrel of the accessory into the collet. Use the wrench to turn the collet nut clockwise until lightly tightened. Do not over-tighten.

Finally, release the spindle lock button.

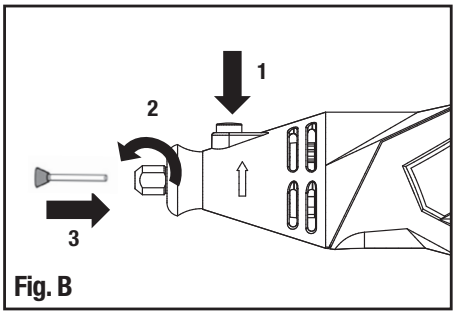

Fig. B

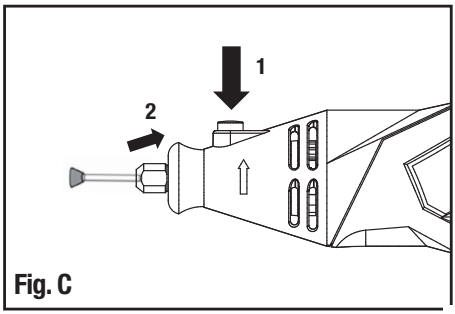

Fig. C

NOTE: Before using the tool, read the instruction book carefully.

WARNING:
Make sure to fully tighten the collet nut before operation. Always use the collet which matches the shank size of the accessory you plan to use. Do not force a small diameter shank into a large size collet.

WARNING:
Do not engage the spindle lock button while the tool is running.

FITTING A CUTTING/GRINDING DISC (FIG. D, E)

Install appropriate mandrel of cutting/grinding disc into collet and tighten as detailed earlier. Unscrew the small screw (a) on top of mandrel, then reinsert screw (a) through one appropriate cutting disc (b) into mandrel and lightly tighten clockwise the screw (a) with wrench. Do not over-tighten, or the cutting disc may crack. Finally , release the spindle lock button.

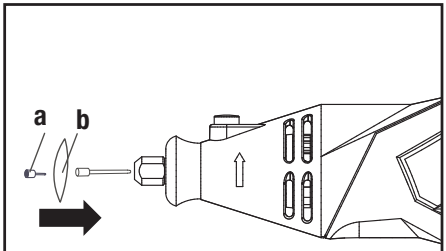

Fig. D

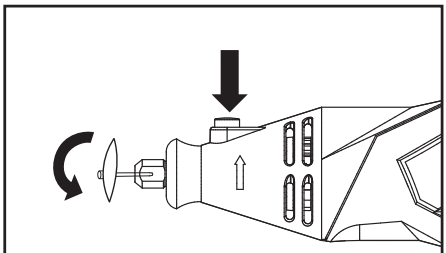
Fig. E

SWITCH ON/OFF (FIG. F)

To start the tool, press the on/off switch (6) to “I” position. To stop, press the on/off switch to “O” position.

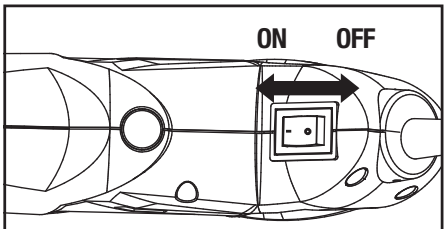

Fig. F

NOTE: The chuck accepts only standard 1/4” (6 mm) hexagonal shank accessories with power groove.

WARNING:
Always hold the tool away from your face. Accessories can be damaged during handling and can fly apart as they come up to speed.

WARNING:
This tool should be set to the slowest speed before switching on, dial the variable speed selector (4) to position “1”.

SPEED SETTING (Fig. G)

The tool has a variable speed selector (4) for precise speed adjustment with number “1” to “6”, the speed can be adjusted from 8000 to 32000 RPM, the “6” position is for the highest speed. Continue to dial the variable speed selector to a higher mark and the speed will increase accordingly.

Always choose the correct speed range for your work according to the material. Determine the correct speed for work on any material by practicing for a few minutes on a piece of scrap.

Choose a low speed when working with wood, plastics and polishing, and use the small tools with high speed and the larger tools with slower speed. When working with plastic, for example, start with slow speed and increase the speed until you observe that the plastic is melting at the point of contact, then reduce the speed slightly to get the optimum working speed.

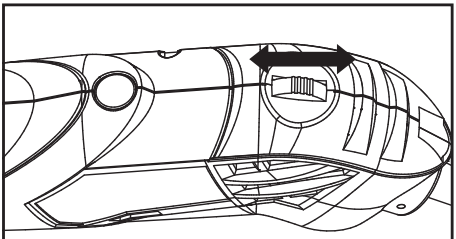

Fig. G

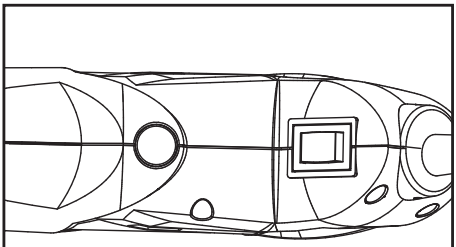

Fig. H

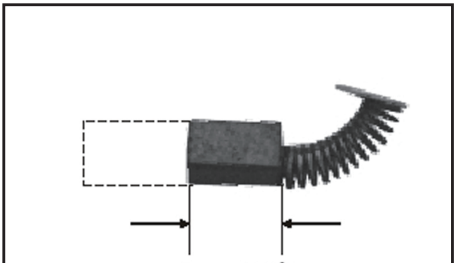

Fig. I

RECOMMENDED WORKING SPEED RANGE:

- Plastic and other materials that melt at low temperatures should be cut with low speed.
- Polishing, buffing and cleaning with a wire brush should use a medium speed of 15,000 RPM to prevent damage to the brush and your material.
- Wood should be cut with high speed.
- Cut metal or mild steel with high speed. If a HSS (high-speed steel) cutter starts with obvious vibration, it usually indicates that it is running too slow.
- Aluminum, copper alloys, lead alloys, zinc alloys and tin should be cut with various speed, depending on the type of cutting being done. Use paraffin (not water) or other suitable lubricant on the cutter to prevent the cut material from adhering to the cutter teeth.

Accessory Description	Soft wood	Hard wood	Plastic	Steel	Aluminum, brass, etc.	Shell, stone	Ceramic	Glass
Grinding disc	15000-32000	15000-32000	8000-15000	15000-32000	18000-22000	15000-32000	15000-32000	/
Cutting disc	15000-32000	15000-32000	8000-15000	15000-32000	18000-22000	15000-32000	15000-32000	/
Diamond grinding bits	15000-32000	15000-32000	15000-32000	15000-32000	18000-22000	15000-32000	15000-32000	/
Sanding paper	15000-32000	8000-15000	8000-17000	15000-32000	18000-22000	15000-32000	15000-32000	/
HSS twist drill bits	15000-32000	15000-32000	8000-15000	/	12000-17000	/	/	/
HSS cutter	15000-32000	15000-32000	8000-15000	8000-15000	12000-17000	/	/	/
Bristle brushes	8000-15000	8000-15000	8000-15000	12000-15000	12000-15000	/	/	/
Stainless brushes	8000-15000	8000-15000	8000-15000	8000-15000	/	/	/	/
Brass brushes	8000-15000	8000-15000	/	8000-15000	8000-15000	8000-15000	/	/
Cloth wheel	/	/	12000-22000	15000-32000	12000-22000	15000-32000	12000-22000	12000-22000
Wool polishing wheel	/	/	12000-17000	12000-17000	12000-17000	15000-32000	12000-17000	12000-17000
Rubber wheel	/	/	/	15000-32000	18000-22000	15000-32000	15000-32000	15000-32000

USING ACCESSORIES

The chart below lists the description, working speed and scope for some of the small articles supplied together with the tool by category. To achieve best performance of the tool, it is strongly recommended that you read it before operation, failure to adhere to this may cause accessories to fail.

WARNING: Always wear eye protection. Insert the shaft fully into the collet.

PICTURE	DESCRIPTION	SPEED REQUIRED	INTENDED USE
	Grinding bits	Full speed 30,000 RPM	Metal Mild steel
	HSS (high-speed steel) cutter	Full speed 30,000 RPM	Wood Zinc Plastic Nickel Copper Mild steel

	Wool polishing wheel	Half speed 15,000 RPM	Metal Mild steel
	Cutting / grinding disc DO NOT over-tighten top screw	Half speed 15,000 RPM	Metal Mild steel Wood
	Rubber sanding roll	Full speed 30,000 RPM	Metal Mild steel
	NOTE: To mount the sanding roll, firstly loosen the small screw on top of the hole for rubber wheel, this will allow the rubber to relax. Slide the sanding roll onto the holder. To secure, simply tighten the screw and the rubber roll will swell, gripping the sanding drum.		

MAINTAIN TOOLS WITH CARE

Remove the plug from the socket before carrying out any adjustment, servicing or maintenance.

Your power tool requires no additional lubrication or maintenance. There are no user-serviceable parts in your power tool. Never use water or chemical cleaners to clean your power tool. Wipe clean with a dry cloth. Always store your power tool in a dry place. Keep the motor ventilation slots clean. Keep all working controls free of dust.

Periodically clear dust and chips from guard and base to ensure proper performance.

Occasionally you may see sparks through the ventilation slots. This is normal and will not damage your power tool.

If the supply cord is damaged, it must be replaced by the manufacturer, its service agent or similarly-qualified persons in order to avoid a hazard.

REPLACING THE CARBON BRUSH (FIG. H, I)

The carbon brushes must be checked regularly. There are two carbon brushes in the tool and they must be replaced in pairs. Remove the carbon brush cover (3) with the supplied wrench and check the brushes length. Replace both carbon brushes if its length is less than 1/4” (6 mm), and no-load run with 15 minutes before operating.

WARNING:
Operating the tool with worn carbon brush will permanently damage the motor. Replace with the correct type of carbon brushes.

WARRANTY

This Mastercraft product is guaranteed for a period of 3 years from the date of original retail purchase against defects in workmanship and materials, except for the following components:

a) Component A: Batteries, chargers and carrying case, which are guaranteed for a period of 2 years from the date of original retail purchase against defects in workmanship and materials;

b) Component B: Accessories, which are guaranteed for a period of 1-year from the date of original retail purchase against defects in workmanship and materials.

Subject to the conditions and limitations described below, this product, if returned to us with proof of purchase within the stated warranty period and if covered under this warranty, will be repaired or replaced (with the same model, or one of equal value or specification), at our option. We will bear the cost of any repair or replacement and any costs of labour relating thereto.

These warranties are subject to the following conditions and limitations:

a) a bill of sale verifying the purchase and purchase date must be provided;

b) this warranty will not apply to any product or part thereof which is worn or broken or which has become inoperative due to abuse, misuse, accidental damage, neglect or lack of proper installation, operation or maintenance (as outlined in the applicable owner's manual or operating instructions) or which is being used for industrial, professional, commercial or rental purposes;

c) this warranty will not apply to normal wear and tear or to expendable parts or accessories that may be supplied with the product that are expected to become inoperative or unusable after a seasonable period of use;

d) this warranty will not apply to routine maintenance and consumable items such as, but not limited to, fuel, lubricants, vacuum bags, blades, belts, sandpaper, bits, fluids, tune-ups or adjustments;

e) this warranty will not apply where damage is caused by repairs made or attempted by others (i.e. persons not authorized by the manufacturer);

f) this warranty will not apply to any product that was sold to the original purchaser as a reconditioned or refurbished product (unless otherwise specified in writing);

g) this warranty will not apply to any product or part thereof if any part from another manufacturer is installed therein or any repairs or alterations have been made or attempted by unauthorized persons;

h) this warranty will not apply to normal deterioration of the exterior finish, such as, but not limited to, scratches, dents, paint chips, or to any corrosion or discolouring by heat, abrasive and chemical cleaners; and

i) this warranty will not apply to component parts sold by and identified as the product of another company, which shall be covered under the product manufacturer's warranty, if any.

Additional Limitations

This warranty applies only to the original purchaser and may not be transferred. Neither the retailer nor the manufacturer shall be liable for any other expense, loss or damage, including, without limitation, any indirect, incidental, consequential or exemplary damages arising in connection with the sale, use or inability to use this product.

Notice to Consumer

This warranty gives you specific legal rights, and you may have other rights, which may vary from province to province. The provisions contained in this warranty are not intended to limit, modify, take away from, disclaim or exclude any statutory warranties set forth in any applicable provincial or federal legislation.

This product is not guaranteed if used for industrial or commercial purposes.

Made in china

Imported by Mastercraft Canada Toronto, Canada M4S 2B8